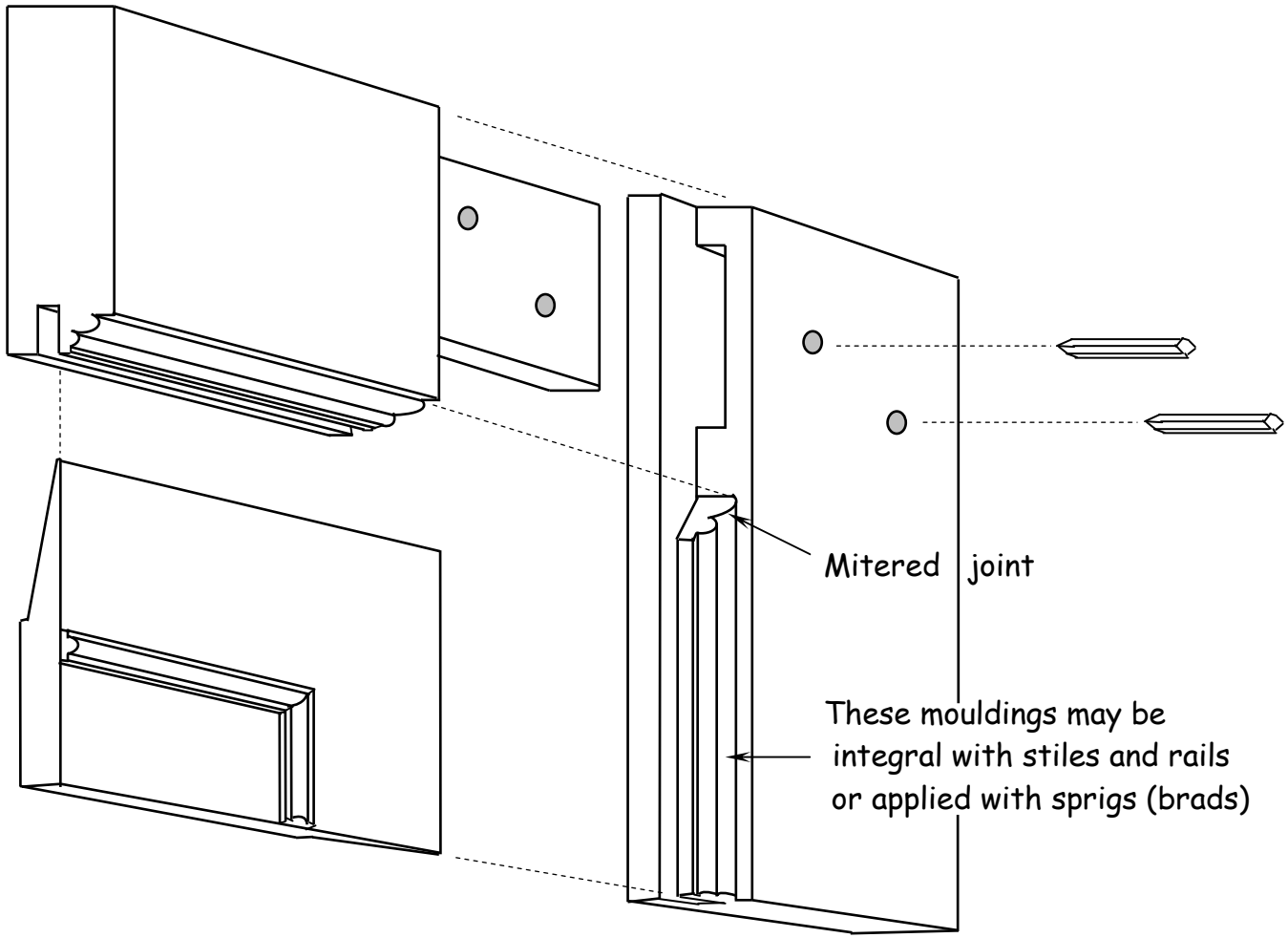

FEDERAL STYLE DOOR, EXPLODED VIEW